Signs

Permit #:_____

Address:_____

Design criteria will meet the ***2006 International Building Code*** for winds of a minimum ***130 MPH and D Seismic*** requirements.

Print Name:_____

Signature:_____ Date:_____

MEMO

December 14, 2007

Effective immediately. All sign applicants are required to identify where, on their plans, the permanent identification will be going on the sign. This way the inspectors don't have to search for it if the applicant is not present at the time of inspection.

Thank you,

Building and Codes Department

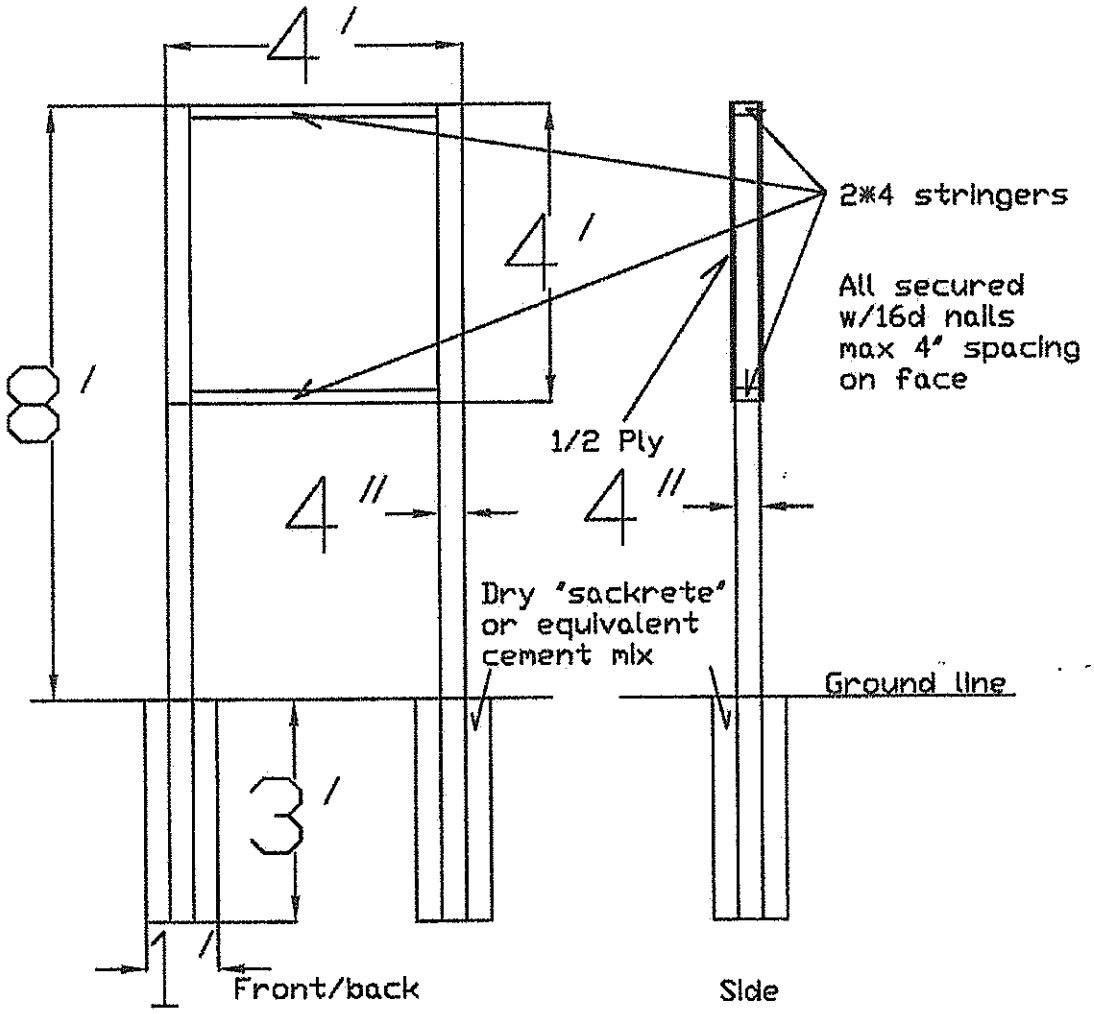

Variances to this design with Chief Building Officials permission only. Sign must have building permit number permenantly attached. Numbers must be readable from a ground position. 4"*4" post are allowed only in 120 MPH or less zones

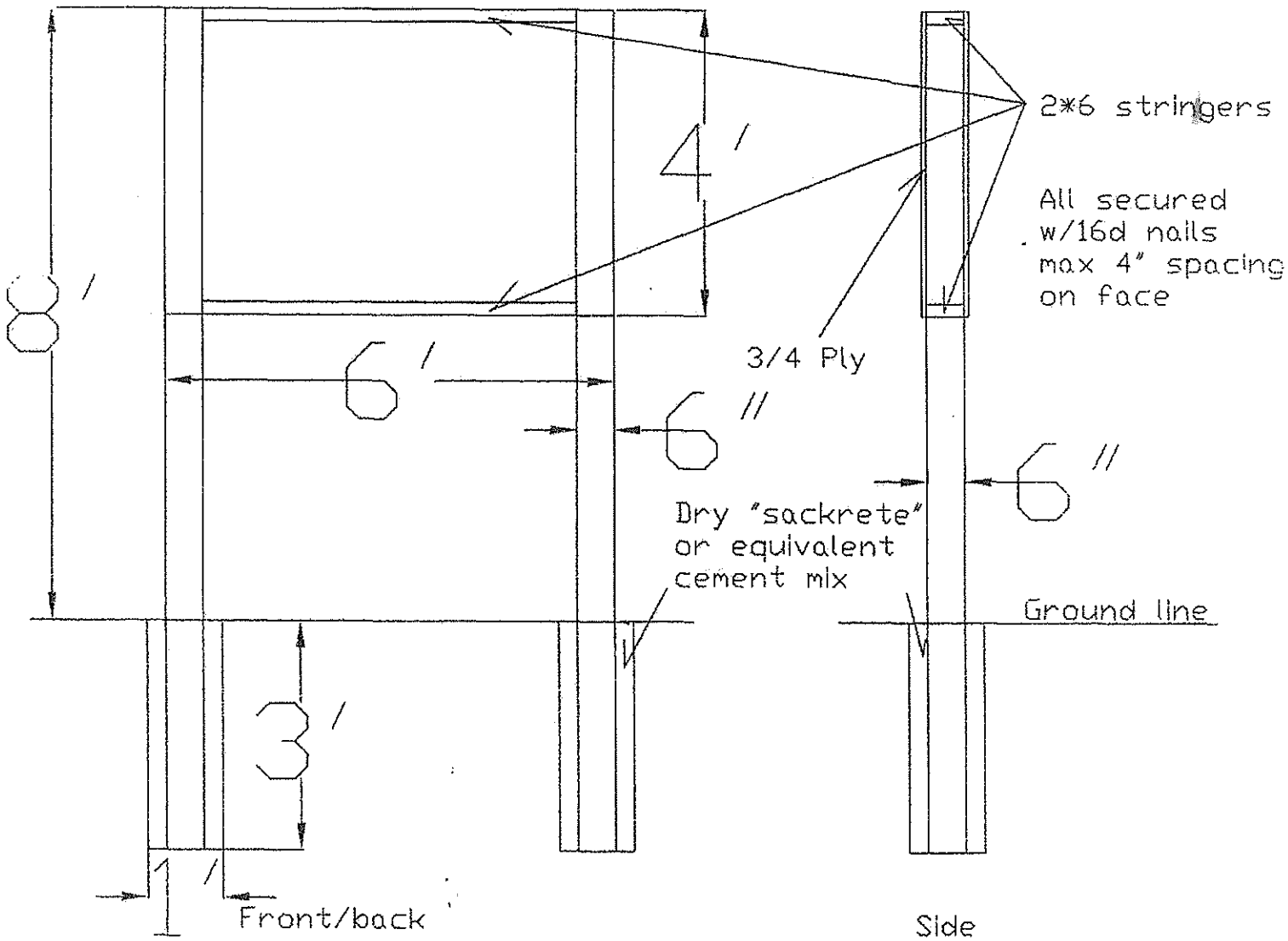

Variances to this design with Chief Building Officials permission only. Sign must have the building permit number permenantly affixed. Numbers must be readable from a ground position.

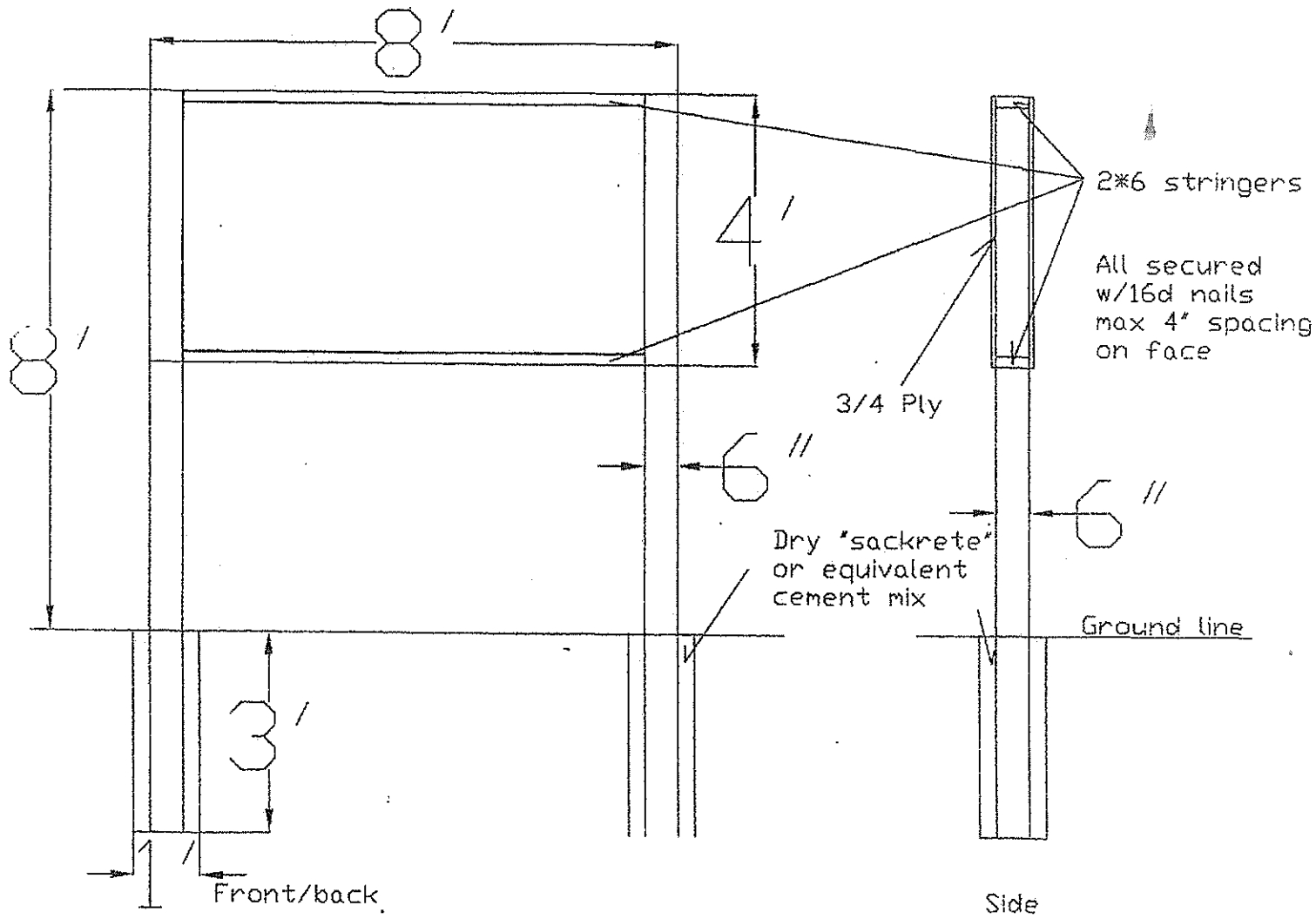

Variances to this design with Chief Building Officials permission only. Sign must have the building permit number permenantly affixed. Numbers must be readable from a ground position.